Impact-R 2120



Features

The Impact-R 2120 series of 2U computers are powered by Intel® based motherboards, delivering a compact and flexible computer platform.

Key features:

- Intel® 12th, 13th, 14th Generation CPU architecture
- DDR5 Memory up to 192GB
- Supports 4 native displays simultaneously

Dimensions

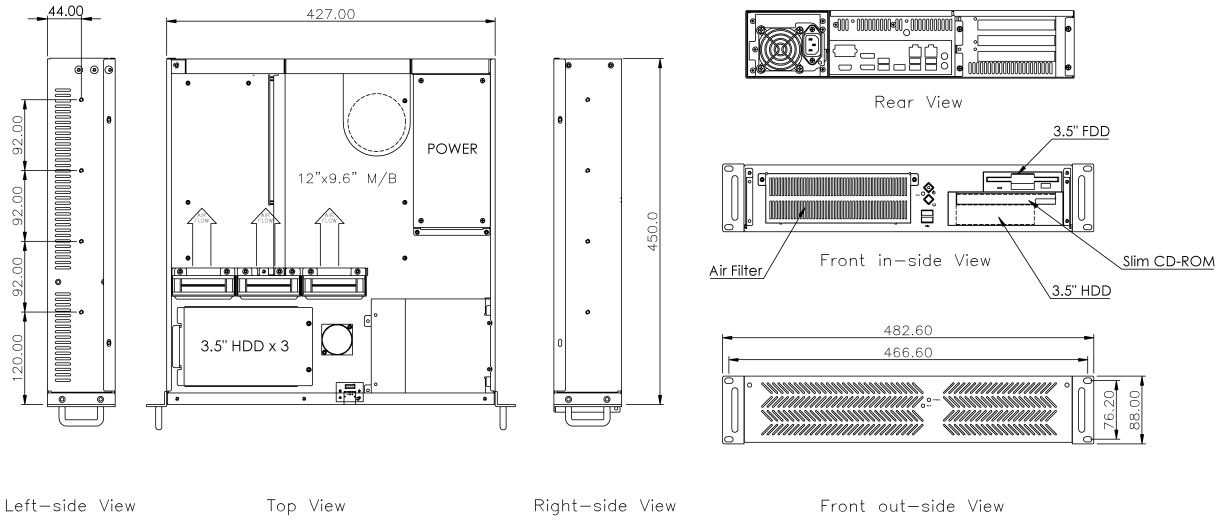

Tel: +31 105298827 Fax: +31 105298828 Email: verkoop@ampliconbenelux.com

Impact-R 2120

The information is believed to be accurate. However Amplicon Liveline Limited accepts no responsibility for any problems caused by errors and omissions. Specifications are subject to change without notice.

Specifications

Hardware Specification	CPU: Intel® LGA1700 12th Generation Core™ i9/i7/i5 Chipset: Intel® Q670E Memory: Four 288-pin UDIMM up to 192GB (Non-ECC) Dual Channel DDR5 up to 4400 MHz LAN: 1 x Intel® I226-LM (Core i9/i7/i5 support iAMT) 1 x Intel® I226-V
BIOS	AMI SPI 256Mbit
Display	1 x VGA, resolution up to 1920x1200 @ 60Hz 2 x DP++, resolution up to 4096x2304 @ 60Hz 1 x HDMI 2.0a, resolution up to 4096x2160 @ 24Hz
Storage	Total Drive capacity: 4 x 3.5" HDD & 1 x 5.25" bay, or 5 x 3.5" HDD & 1 x Slim DVD 4 x SATA 3.0 (up to 6Gb/s) RAID 0/1/5/10
System Expansion	2 x PCIe x16 (Gen 4, 16 or 8+8) —Support PCIE1/PCIE4 : single at x16(PCIE1) —Support PCIE1/PCIE4 : dual at x8(PCIE1)/x8(PCIE4) —Support PCIE1 : Riser card x16 or x8/x8 selected by BOM change 3 x PCIe x4 (Gen 4, open edge) 1 x PCIe x4 (Gen 3, open edge, opt. share M.2-M2, function selected by BIOS.) 1 x PCI 1 x M.2 2230 E key (PCIe/USB 2.0/Intel CNVi/Wifi 6E) 1 x M.2 2242/2260/2280 M key (PCIe x4 Gen4 NVMe, SATA) 1 x M.2 2242/2260/2280 M key (default, PCIe x4 Gen3 NVMe share PCIe#6, function selected by BIOS.)
External Interfaces	Front: 2 x USB 2.0/1.1 On/Off Switch, Reset Pwr/HDD LEDs Rear: 2 x 2.5GbE (RJ-45) 4 x USB 3.2 Gen 2 4 x USB 3.2 Gen 1 1 x VGA, 2 x DP++, 1 x HDMI 1 x Line-out, 1 x Mic-in

Optional Breakout Interfaces (Will use 1 slot per breakout)	2 x RS-232/422/485 4 x RS-232 2 x USB 3.2 Gen 1 1 x USB 2.0 Type A 2 x USB 2.0 (Header 2x) 1 x Front Audio Header 1 x S/PDIF 1 x PS/2 (2.54mm pitch) 4-IN / 8-OUT DIO 1 x eSPI 1 x SMBus
System Architecture	Intel® Based Industrial motherboard
Supported O/S	Windows 10 IoT Enterprise 64-bit Windows 11 LTSC Linux
Mechanical	Design: EIA RS-310C 19" Rackmount Standard Construction: Heavy Duty Cold Rolled Electroplated Steel Colour: Black (custom colours available for large orders) Dimensions: 483(W) x 88(H)x 450(D)mm (19.0" x 3.5" x 17.7") Package Size: 615(W) x 224(H) x 600(D)mm (24.2" x 8.8" x 23.6") Total drive capacity: 1 x Slim 5.25" external, 1 x 3.5" external, 4 x 3.5" internal or 1 x 5.25" external, 1 x 3.5" external, 3 x 3.5" internal Cooling: 3 x 80mm ball bearing fans (42.5 CFM each) Air filter: removable (washable) Gross Weight: approximately 17 kg
Environmental operation	Acoustic noise: Approximately 49dB(A) sound pressure at 23°C (typical) Temperature: Operating: -5 to 65°C Humidity: Operating: 5 to 95% RH
Environmental storage	Temperature: Storage: -20 to 70°C with RTC Battery; -40 to 85°C without RTC Battery Humidity: Storage: 5 to 95% RH
Reliability	System MTBF: 208,538 hrs @ 25°C; 135,107 hrs @ 40°C; 76,715 hrs @ 60°C; 58,368 hrs @ 70°C Calculation Model: Telcordia Issue 2 Environment: GB, GC - Ground Benign, Controlled
Certifications	CE, UKCA